Diritti riservati All rights reserved

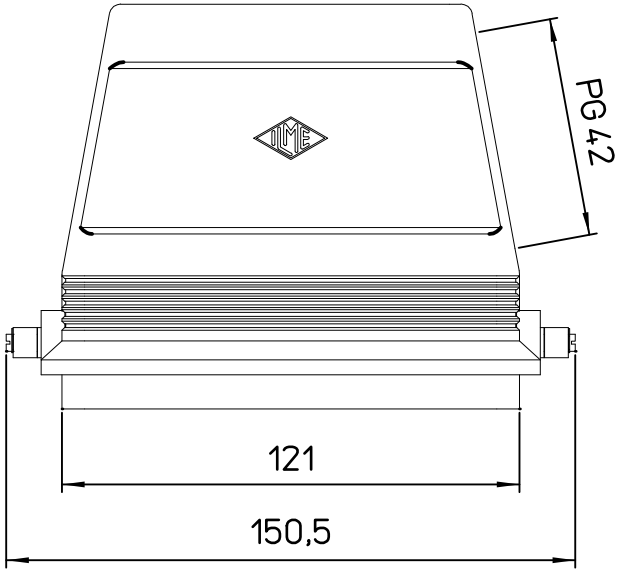

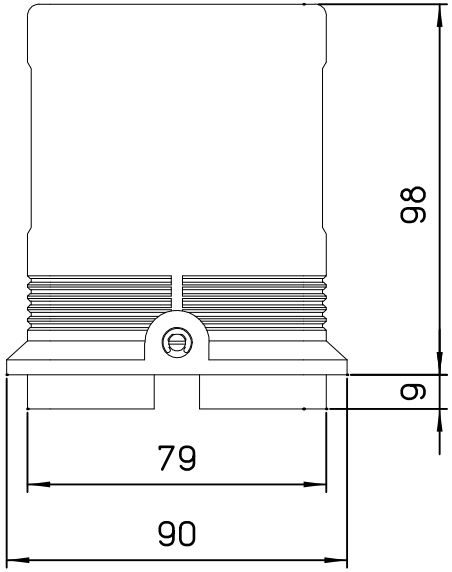

dimensions in mm	CFO 48 L42	Scale	
Date 14/12/06	hood side entry PG42 no adapt.	1:2	
Sign.			